MO 2.0 SETTING SHEET Ver.01

DRIVER: Yui Kaino
DATE: 2023/11/26

CIRCUIT: RC PARK GOJO
◉INDOOR ○OUTDOOR
◉DIRT ○ASTROTURF ○CARPET ○GLASS ○WOOD
○WET ○DRY ○DUSTY ○SMOOTH ○BUMPY
○HARD PACKED ◉CLAY ○BIUE GROOVE ○ ____
○LOW TRACTION ◉MED TRACTION ○HIGH TRACTION

FRONT

◆CAMBER ◉←→○ 2.0 °
◆TOE ○IN ◉OUT 0.5 °
◆RIDE HEIGHT 15 mm

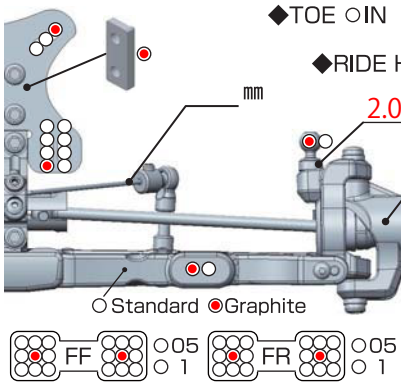

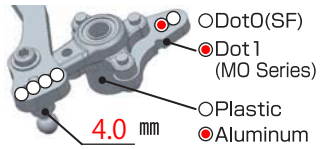

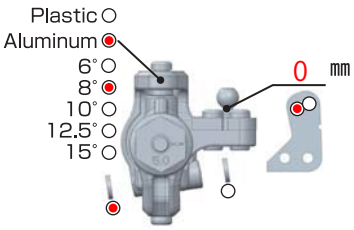

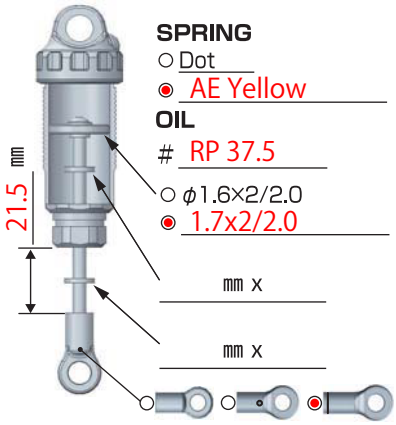

SPRING
○ Dot ____
◉ AE Yellow
OIL
RP 37.5
○ ϕ1.6×2/2.0
◉ 1.7x2/2.0
mm x ____
mm x ____

REAR

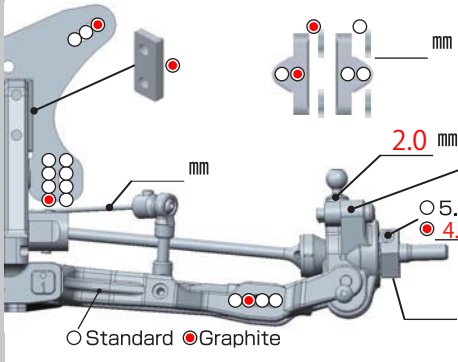

◆CAMBER ◉←→○ 2.0 °
◆RIDE HEIGHT 16 mm

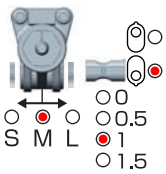

1 ×
1 ×

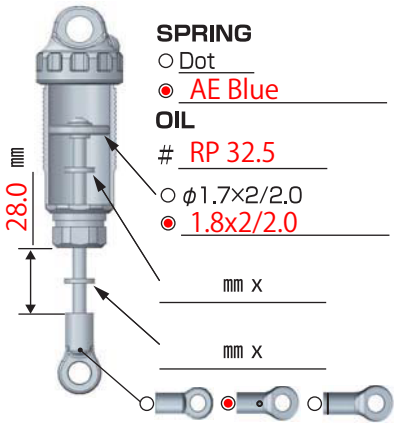

SPRING
○ Dot ____
◉ AE Blue
OIL
RP 32.5
○ ϕ1.7×2/2.0
◉ 1.8x2/2.0
mm x ____
mm x ____

DRIVE

F/# 10000
○2 ◉4 gear
R/# 10000
○2 ◉4 gear

◉F2 ◉R2
○F1 ○R1
○F0 ○R-0.5

CENTER POSITION ◉Forward ○Back

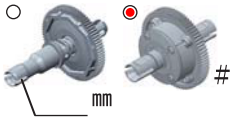

300000

MOTOR ➪ Hobby Wing 5.5T Rotor mm
GEAR ➪ Spur 80 T ／ Pinion 19 T : 2.5
BATTERY ➪ TRION 4600
ESC ○ YOKOMO RPX3 ○YOKOMO BL-PRO4
◉ Hobby Wing

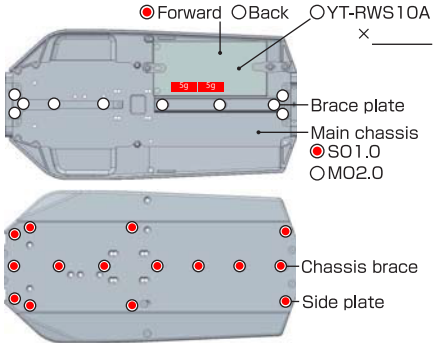

TIRE

FRONT
TIRE ➪ J Concept Smoothie
INSERTS ➪ J Concept
WHEELS ➪ YOKOMO

REAR
TIRE ➪ J Concept Smoothie
INSERTS ➪ J Concept
WHEELS ➪ YOKOMO

OTHER

○
○

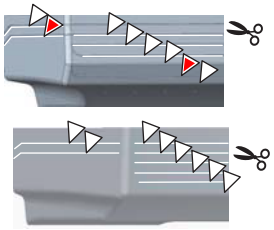

◉ Z2-DTM31WA (Aero Hi-clearance 7')
○ Z2-CAL2WA (LMR27)
○ ____

COMMENT

Titanium Screw
Ti Turnbuckle
S4-CFMU Cooling Fan Mount (Upper)